DRAFT

# UNDERWATER BRIDGE INSPECTION REPORT

## STRUCTURE NO. 7305796
## (SCI-348R-17510)
## SR-348 OVER SCIOTO RIVER
## SCIOTO COUNTY, OH
## DISTRICT 9

**June 2024**

*Prepared for:*

STATE OF OHIO DEPARTMENT OF TRANSPORTATION

*Prepared by:*

COLLINS ENGINEERS INC.

124 Venture Court, Suite 10

Lexington, Kentucky 40511

859.367.0097 • www.collinsengr.com

TABLE OF CONTENTS

EXECUTIVE SUMMARY
1.0 INTRODUCTION ..... 1
1.1 Purpose and Scope ..... 1
1.2 General Description of the Structure ..... 1
1.3 Method of Investigation ..... 1
2.0 EXISTING CONDITIONS ..... 2
2.1 General Conditions ..... 2
2.2 Substructure Conditions ..... 3
2.2.1 Pier 1 ..... 3
2.2.2 Pier 2 ..... 3
2.2.3 Pier 3 ..... 3
2.2.4 Channel Bottom and Scour Assessment ..... 3
3.0 EVALUATION AND RECOMMENDATIONS ..... 4
EXHIBIT 1 – FIGURES ..... 6
LOCATION MAP
SOUNDING PLAN
HYDROGRAPHIC SURVEY
CHANNEL CROSS SECTIONS – 50 FT UPSTREAM & UPSTREAM FASCIA
CHANNEL CROSS SECTIONS – STRUCTURE CENTERLINE
CHANNEL CROSS SECTIONS – 50 FT DOWNSTREAM & DOWNSTREAM FASCIA
PIER 1
PIER 2
PIER 3
EXHIBIT 2 – INSPECTION PHOTOGRAPHS ..... 16
Photograph No. 1: Overall View of Structure No. 7305796 (SCI-348R-17510), Looking South.
Photograph No. 2: Overall View of Structure No. 7305796 (SCI-348R-17510), Looking North.
Photograph No. 3: Overall View of the East Approach, Looking West.
Photograph No. 4: Overall View of the West Approach, Looking East.
Photograph No. 5: View of the East Embankment Upstream of the Structure, Looking East.
Photograph No. 6: View of the East Embankment at the Structure, Looking Southeast
Photograph No. 7: View of the East Embankment Downstream of the Structure, Looking Southeast.
Photograph No. 8: View of the West Embankment Upstream of the Structure, Looking Northwest.
Photograph No. 9: View of the West Embankment at the Structure, Looking West.

DRAFT

Photograph No. 10: View of the West Embankment Downstream of the Structure, Looking Southwest.
Photograph No. 11: View of the Upstream Channel, Looking North.
Photograph No. 12: View of the Downstream Channel, Looking South.
Photograph No. 13: View of the Typical Underdeck Condition, Looking South.
Photograph No. 14: View of the East Face of Pier 1, Looking West.
Photograph No. 15: View of the West Face of Pier 1, Looking Northeast.
Photograph No. 16: View of the Typical Concrete Condition Below the Waterline, Looking East.
Photograph No. 17: View of the East Face of Pier 2, Looking West.
Photograph No. 18: View of the West Face of Pier 2, Looking Southeast.
Photograph No. 19: View of the East Face of Pier 3, Looking West.
Photograph No. 20: View of the West Face of Pier 3, Looking East.
EXHIBIT 3 – UNDERWATER DIVE INSPECTION PROCEDURE CHECKLIST .....27

DRAFT

## EXECUTIVE SUMMARY

***Project:*** ODOT D9 Underwater Bridge Inspections - 2024.

***Purpose of Project:*** To perform a detailed visual and tactile underwater investigation of bridges for the Ohio Department of Transportation, District 9.

***Inspection Team:*** Team Leader – Kevin Mitchell, E.I.T. – Collins Engineers, Inc.
Team Member – Joshua Sukow – Collins Engineers, Inc.
Team Member – Nicholas Lane – Collins Engineers, Inc.

***Inspection Date(s):*** June 6, 2024

| | | | |
|---|---|---|---|
| ***Water Visibility:*** | 1 ft | ***Water Velocity:*** | 2 ft/s |
| ***Water Temperature:*** | 75 °F | ***Weather:*** | Clear – 79 °F |
| ***Waterline Elevation:*** | 508.59 ft | ***Type of Boat:*** | 10 ft Kayak |
| ***High-water Elevation:*** | 510.0 ft | | |
| ***Coordinates:*** | 38.88126°N, 83.01823°W | | |
| ***Access Location:*** | Northwest Embankment at the Structure | | |
| ***Dive Mode:*** | Commercial SCUBA | | |

***Waterline Reference:*** 24.0 ft below the bottom of cap nose at the downstream nose of Pier 3.
***Maximum Depth at SSU:*** 17.1 ft – East Face of Pier 1
***Shoreline Conditions:*** The east and west shorelines consisted of moderately vegetated moderate slopes with rip rap up to 3 ft diameter. Minor erosion with up to 3 ft vertical cut banks was observed at the east embankment.

***Summary of Findings:***

- **Pier 1:**
  - The submerged portions of the pier exhibited light scaling up to 1/16 in. deep extending from the channel bottom to the waterline.
  - Heavy timber debris accumulation consisting of branches up to 3 in. diameter was observed along the entire west and east face of the pier. A timber log up to 2 ft diameter was observed wrapped around the upstream nose of the pier located approximately 3 ft below the waterline.
  - A scour depression with undermining up to 4.8 ft vertical was observed around the entire pier at Pier 1. The pier is pile supported, and the piles were adequately embedded in the channel bottom at the time of inspection.
  - The exposed steel H-piles typically exhibited rust nodules up to 1/2 in. diameter with up to 1/8 in. section loss.
  - The flow angle of attack was observed to be striking the northeast corner approximately 10 degrees off the upstream nose of Pier 1.
- **Pier 2:**
  - The submerged portions of the pier exhibited light scaling up to 1/16 in. deep extending from the channel bottom to the waterline.

DRAFT

- A timber log up to 3 ft diameter was observed from the upstream nose along the east face of the pier.

- **Pier 3:**
  - The submerged portions of the pier exhibited light scaling up to 1/16 in. deep extending from the channel bottom to the waterline.

***Summary of Recommendations:***

- Perform structural analysis to determine stability at Pier 1 due to undermining.
- Replace lost bearing material with backfill and place properly designed riprap around Pier 1.
- Consider river training devices such as spur dikes to reduce scour at Pier 1.
- Create a scour POA until the repairs have been completed.
- Remove timber debris at Piers 1 and 2.
- Monitor the channel bottom.

DRAFT

***Underwater Inspection Coding:***

**NBI Ratings:**

| Item | Description | Coding | Condition |
|---|---|---|---|
| 60 | Substructure | 4– Poor Condition | Undermining at Pier 1 |
| 61 | Channel | 4– Poor Condition | Scour, Timber Debris |
| 92B | Insp. Date | June 6, 2024 | |
| 93B | UW Insp. Interval | 12 Months | |
| 113 | Scour Cond. Rating | 3– Below Foundation Limits | Unstable |

**AASHTO National Bridge Element (NBE) Ratings:**

| Element # | Description | Units | Total | Condition State | | | |
|---|---|---|---|---|---|---|---|
| | | | | 1 | 2 | 3 | 4 |
| 210 | Reinforced Concrete Pier Wall | LF | 57 | 33 | 5 | 19 | 0 |
| 225 | Steel Pile | EA | 27 | 0 | 27 | 0 | 0 |
| 220 | Reinforced Concrete Pile Cap / Footing | LF | 27 | 0 | 0 | 27 | 0 |

Note: Ratings were developed using the FHWA Specifications for the National Bridge Inventory and AASHTO Manual for Bridge Element Inspection, 2nd Ed. The recommended ratings consider inspected elements located within the waterway and conditions existing below the water surface only. Additional consideration is necessary for the assignment of overall condition ratings for this bridge.

DRAFT

# 1.0 INTRODUCTION

## 1.1 Purpose and Scope

This report consists of the results of a detailed underwater investigation performed at the SR-348 Bridge over Scioto River in Scioto County, OH. Collins Engineers, Inc. (Collins) conducted the underwater investigation for the Ohio Department of Transportation (ODOT), District 9 on June 6, 2024. The primary purpose of the investigation was as follows:

- Determine the condition of the substructure components located in the water at the time of the inspection from the waterline to the channel bottom.
- Obtain channel bottom depth measurements along the bridge fascias, upstream and downstream of the bridge, and around the submerged substructure units.
- Determine the condition of the shorelines in the vicinity of the structure.
- Obtain photographs of the bridge and any significant defects.

In addition, a brief inspection was made of areas that could be submerged during periods of high water. The following report includes a description of the structure, the method of investigation, a description of existing conditions, an evaluation and recommendations based on the conditions, inspection figures, and photographs.

## 1.2 General Description of the Structure

Structure No. 7305796 (SCI-348R-17510) spans 465 ft, carrying SR-348 over Scioto River and is approximately 46 ft wide. The bridge superstructure is constructed of four spans, each composed of six steel girders. The roadway orientation of the longitudinal axis of the bridge is west to east. The substructure units are labeled as Abutments 1 and 2 and Piers 1 through 3. Existing design drawings were available at the time of the inspection and were used to determine water surface elevation and foundation elevations. Refer to Figure 1 in Exhibit 1 for a Location Map of the bridge. Refer to Photographs 1 through 4 in Exhibit 2 for overall views of the bridge.

## 1.3 Method of Investigation

A detailed field inspection was conducted to determine the physical condition of the submerged bridge substructure units from the waterline to the channel bottom. A brief visual examination of the substructure units above the waterline was also made.

DRAFT

A three-person team consisting of Engineer-Diver and Team Leader (Kevin Mitchell, E.I.T.) and two Technician-Divers (Nicholas Lane and Joshua Sukow) conducted the underwater inspection. The inspection was conducted SCUBA equipment. During the inspection, the inspectors worked from the shore and a note taker on the shore recorded the inspection notes.

The underwater inspection consisted of a visual and tactile examination of the accessible surfaces of the substructure units from the waterline to the channel bottom with particular attention given to any observed areas of deterioration or apparent distress. Approximately 10 percent of the total area on the underwater surfaces of the substructure units was cleaned so that the condition could be more closely examined. Photographs were taken to document the general conditions and observed deficiencies. The type of channel bottom material, the presence or extent of scour, the presence or extent of riprap, the presence or extent of drift and debris, and the location of any foundation exposure or undermining were noted.

Channel bottom soundings were performed utilizing a leadline, telescoping survey rod, and digital fathometer. Soundings were taken parallel to the bridge at the upstream and downstream fascias, parallel to the bridge at 50 ft upstream and downstream, at quarter-point intervals between the substructure units, and at 10 ft intervals in-line with the piers upstream and downstream up to 50 ft; the waterline was referenced to a known elevation on the bridge. A sounding plan was developed using the soundings and approximate location of the shorelines. Refer to Figures 2 through 6 in Exhibit 1 for the sounding plan, hydrographic survey, and channel cross sections that show the channel limits and water depths around the structure.

## 2.0 EXISTING CONDITIONS

### 2.1 General Conditions

At the time of the inspection, the waterline of Scioto River was located approximately 24.0 ft below the bottom of cap nose at the downstream nose of Pier 3, which corresponds to a waterline elevation of 508.59 ft. During the inspection, the waterway was flowing north to south below the structure at a rate of 2 ft/s. The approximate high-water elevation was observed to be 510.0 ft.

The bridge pier skew was not consistent with the channel alignment and therefore requires attention at this time. The flow angle of attack was observed to be striking the northeast corner approximately 10 degrees off the upstream nose of Pier 1. The east and west shorelines consisted of moderately vegetated moderate slopes with rip rap up to 3 ft diameter. Minor erosion with up to 3 ft vertical cut banks was observed at the east

DRAFT

embankment. Refer to Photographs 5 through 13 in Exhibit 2 for views of the shorelines near the structure and typical underdeck condition.

## 2.2 Substructure Conditions

### *2.2.1 Pier 1*

The channel bottom material around Pier 1 consisted of boulders up to 6 in. diameter with sand in-fill and no probe rod penetration. The submerged portions of the pier exhibited light scaling up to 1/16 in. deep extending from the channel bottom to the waterline. Heavy timber debris accumulation consisting of branches up to 3 in. diameter was observed along the entire west and east face of the pier, and a timber log up to 2 ft diameter was observed wrapped around the upstream nose of the pier located approximately 3 ft below the waterline. A scour depression with undermining up to 4.8 ft vertical was observed around the entire pier at Pier 1. The pier is pile supported, and the piles were adequately embedded in the channel bottom at the time of inspection. The exposed steel H-piles typically exhibited rust nodules up to 1/2 in. diameter with up to 1/8 in. section loss. Refer to Figure 7 in Exhibit 1 for detailed inspection notes of Pier 1. Refer to Photographs 14 through 16 in Exhibit 2 for views of Pier 1 and typical concrete condition below the waterline.

### *2.2.2 Pier 2*

The channel bottom material around Pier 2 consisted of boulders up to 6 in. diameter with sand in-fill and no probe rod penetration. The submerged portions of the pier exhibited light scaling up to 1/16 in. deep extending from the channel bottom to the waterline. A timber log up to 3 ft diameter was observed from the upstream nose along the east face of the pier. Refer to Figure 8 in Exhibit 1 for detailed inspection notes of Pier 2. Refer to Photographs 17 and 18 in Exhibit 2 for views of Pier 2.

### *2.2.3 Pier 3*

The channel bottom material around Pier 3 consisted of boulders up to 6 in. diameter with sand in-fill and no probe rod penetration. The submerged portions of the pier exhibited light scaling up to 1/16 in. deep extending from the channel bottom to the waterline. Refer to Figure 9 in Exhibit 1 for detailed inspection notes of Pier 3. Refer to Photographs 19 and 20 in Exhibit 2 for views of Pier 3.

### *2.2.4 Channel Bottom and Scour Assessment*

At the time of the inspection, the Scioto River was experiencing normal flow and the channel bottom appeared unstable for the type of material. The channel bottom was primarily boulders up to 6 in. diameter with sand in-fill surrounding the substructure units and sand throughout the rest of the channel. The flow angle of

DRAFT

attack striking the northeast corner of the pier could be contributing to the scour and complete undermining along the east face of Pier 1.

## 3.0 EVALUATION AND RECOMMENDATIONS

Overall, the submerged substructure units of Structure No. 7305796 (SCI-348R-17510) were in **poor condition** below water. A comparison of the soundings recorded during the previous inspection on July 27, 2019 and the soundings taken during this inspection revealed advancing footing exposure and undermining of Pier 1. A structural analysis should be performed to determine the stability of Pier 1 due to undermining of the footing. **To prevent further deterioration of the bearing material, corrective actions should be taken at this time.** The lost bearing material should be replaced with backfill and properly designed riprap should be placed around Pier 1. Properly designed river training devices such as spur dikes should also be considered to reduce scour at Pier 1, and it is recommended to create a scour POA until the repairs have been completed. The channel bottom configuration should continue to be closely monitored during future underwater inspections to verify that the footing exposure and undermining is not increasing and that all piles remain adequately embedded in the channel bottom.

The timber debris accumulation at Pier 1 is a cause of scour and footing exposure and **should be removed** at this time. The timber debris accumulation at Pier 2 did not significantly affect the channel flow but should be removed at the same time of the Pier 1 timber removal. Removal of the timber debris at Piers 1 and 2 will reduce excessive lateral loads on the pier, limit further debris accumulation, and reduce the likelihood of channel bottom degradation resulting from obstructed flow.

DRAFT

It is recommended that the submerged substructure units of Structure No. 7305796 (SCI-348R-17510) be next inspected underwater at an interval not to exceed 12 months, no later than June 6, 2025.

Respectfully Submitted,
COLLINS ENGINEERS, INC.

Matthew Rogers

Matthew Rogers, P.E.
Project Manager

Originated by:
Olivia Farmer, E.I.T.

DRAFT

# EXHIBIT 1 – FIGURES

DRAFT

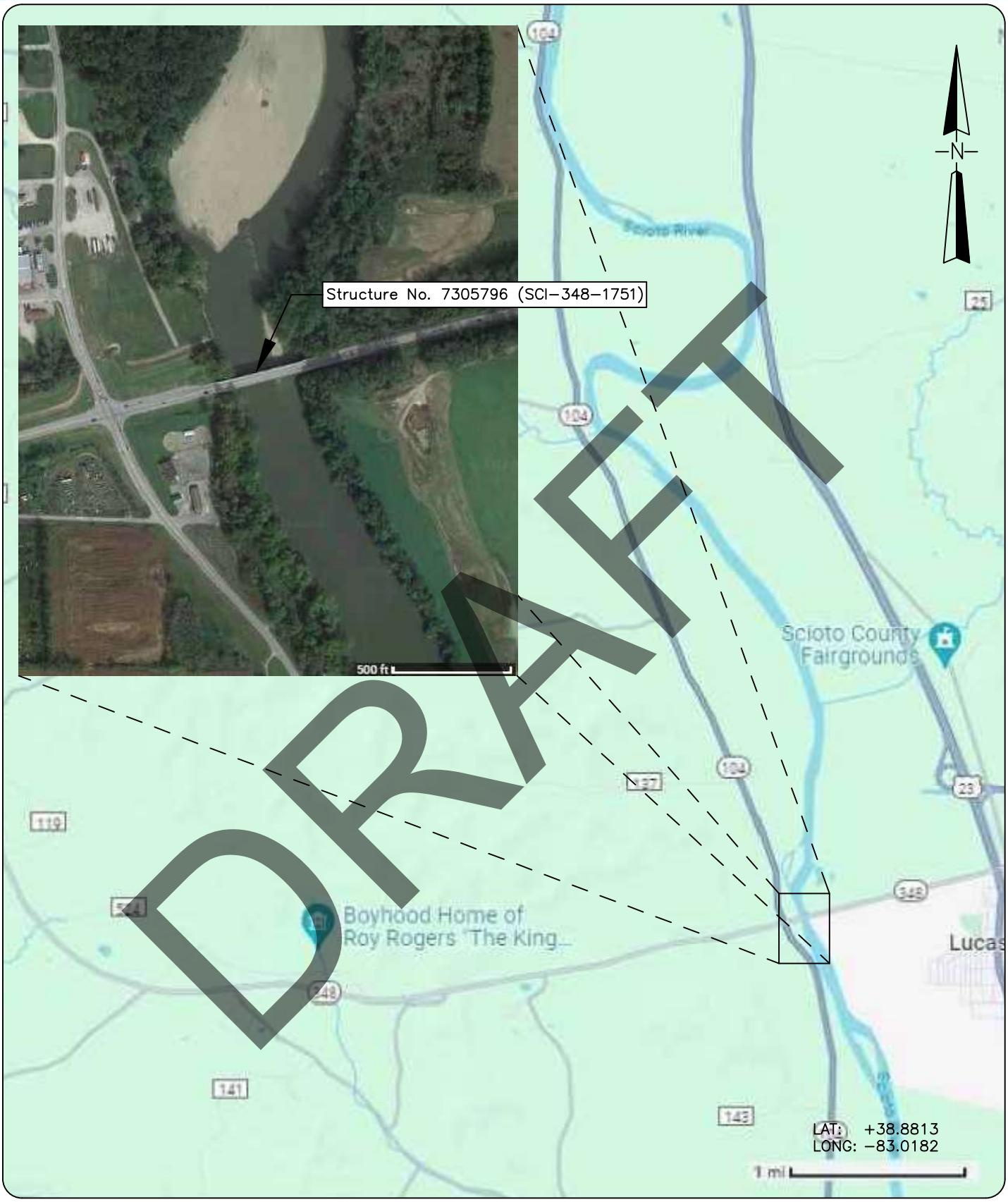


COLLINS ENGINEERS INC
124 Venture Court, Ste 10
Lexington, KY 40511
Phone: 859-367-0097
Fax: 859-367-0140

Ohio Department of Transportation, District 9
650 Eastern Avenue
Chillicothe, OH 45601
Phone: 740-773-2691

# SR-348 OVER SCIOTO RIVER
# STRUCTURE NO. 7305796

## LOCATION MAP

SCIOTO COUNTY, OHIO

| | |
|---|---|
| INSPECTED BY: JDS | CEI PROJECT: 55–15629.00 |
| DRAWN BY: OPF | DATE: 06 JUN 2024 |
| CHECKED BY: MOR | SHEET NO: 1 |

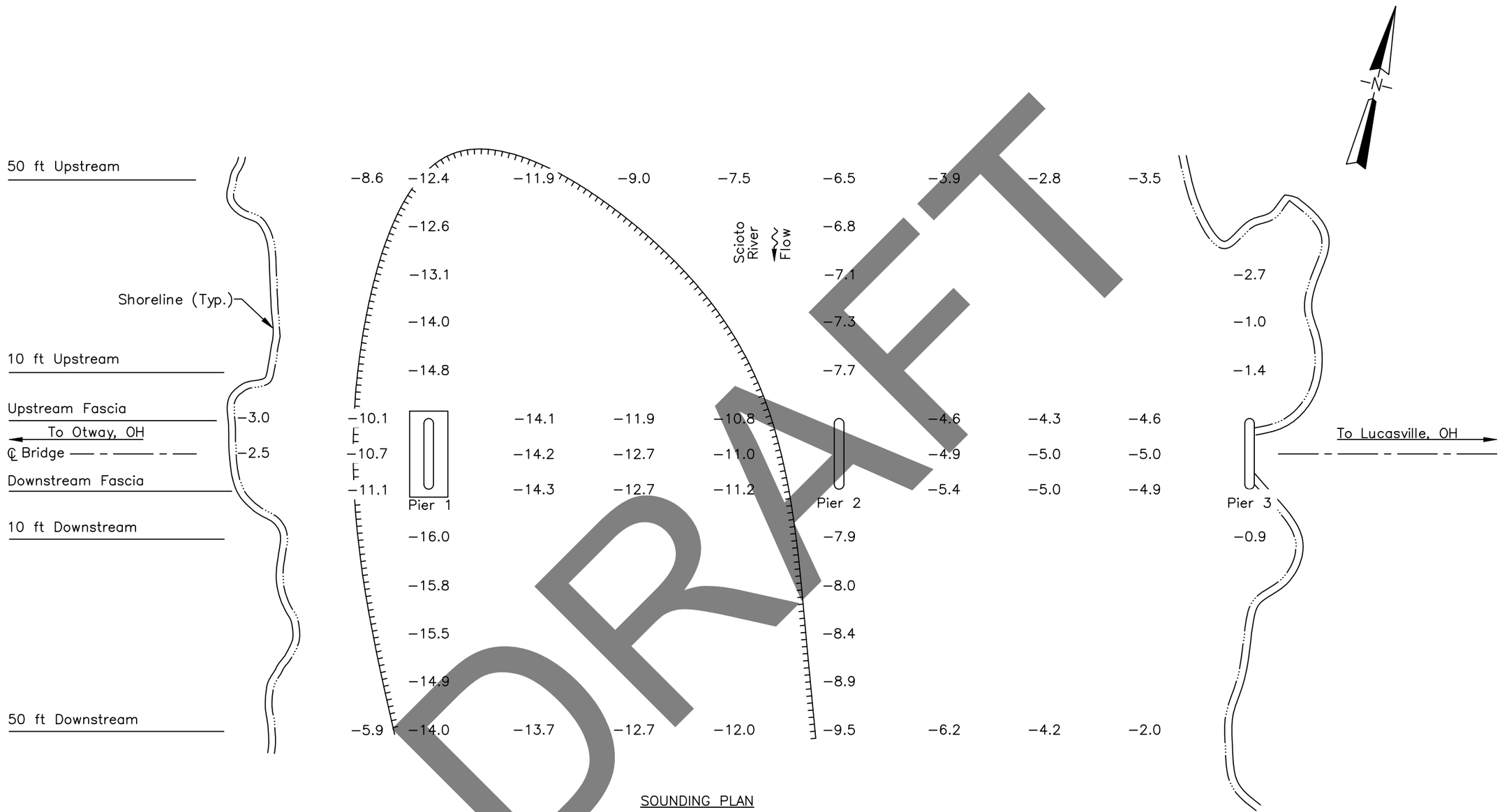


SOUNDING PLAN

DRAFT

GENERAL NOTES:

1. Piers 1 through 3 were inspected underwater.
2. At the time of inspection on June 6, 2024, the waterline was located approximately 24.0 ft below the bottom of the pier cap nose on Pier 3 at the downstream nose (EL. +532.59 ft). This corresponds with a waterline elevation of +508.59 ft.
3. Soundings indicate the water depth at the time of inspection and are measured in feet.
4. Soundings were taken parallel to the bridge at the upstream and downstream fascias, parallel to the bridge at 50 ft upstream and downstream, at quarter−point intervals between the substructure units, and at 10 ft intervals in−line with the piers upstream and downstream up to 50 ft.

LEGEND

| | |
|---|---|
| −2.7 | Sounding Depth from Waterline (ft) |
| | Timber Debris |
| | Approximate Scour Limits |

COLLINS ENGINEERS
124 Venture Court, Ste 10
Lexington, KY 40511
Phone: 859-367-0097
Fax: 859-367-0140

Ohio Department of Transportation, District 9
650 Eastern Avenue
Chillicothe, OH 45601
Phone: 740-773-2691

SR-348 OVER SCIOTO RIVER
STRUCTURE NO. 7305796
SOUNDING PLAN
SCIOTO COUNTY, OHIO

| | |
|---|---|
| CEI PROJECT | 55−15629.00 |
| INSPECTED BY: | JDS |
| DRAWN BY: | OPF |
| CHECKED BY: | MOR |
| DATE: | JUN 2024 |
| SHEET NO: | 2 |

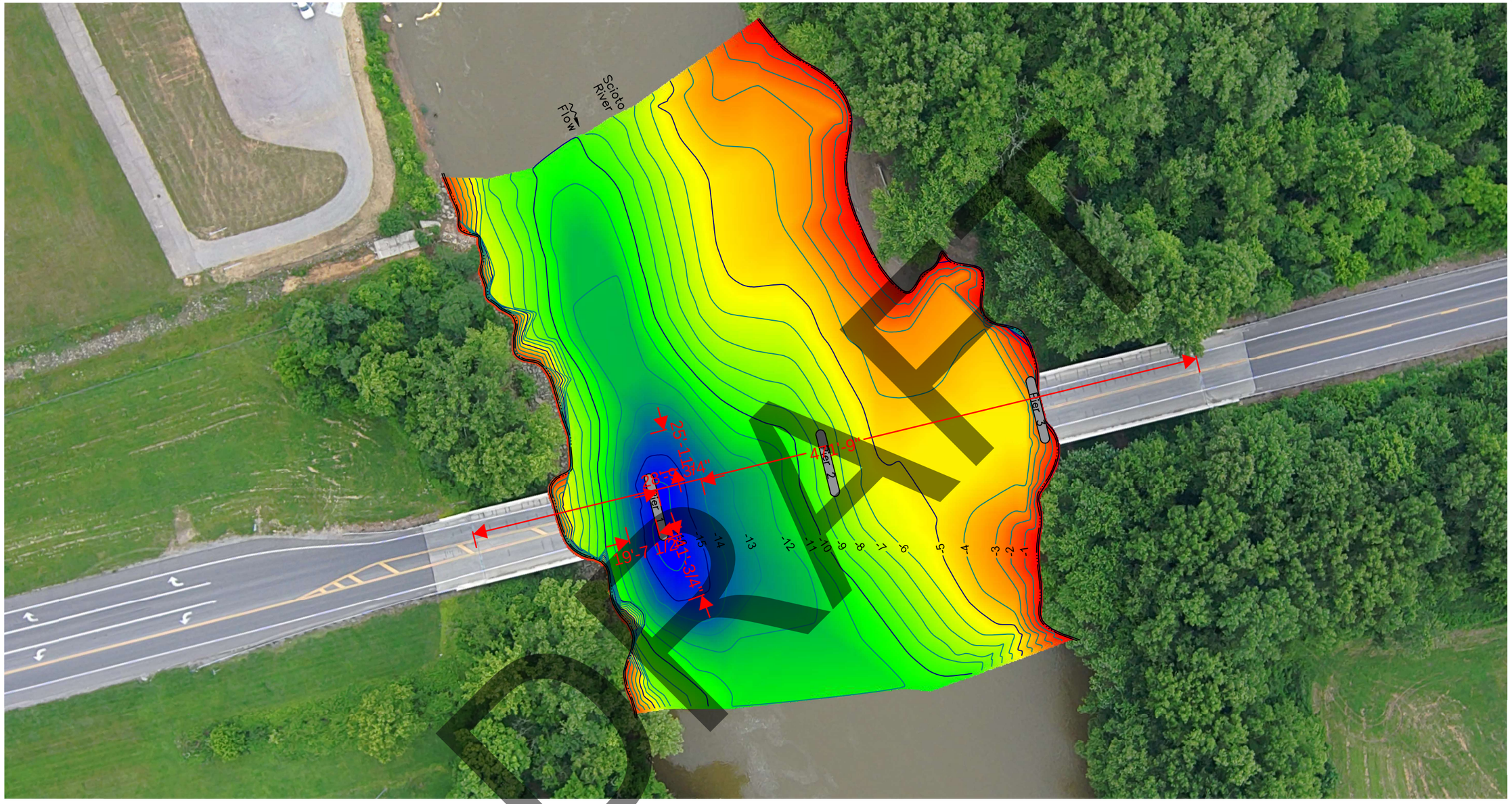


DRAFT

## GENERAL NOTES:

1. The hydrographic survey was completed on June 6, 2024 by Collins Engineers, Inc.
2. Soundings were obtained using a continuously recording fathometer operating at 200kHz and linked to a WAAS capable GPS receiver.
3. All water depths are in feet and are referenced to the waterline elevation stated in the Structure Notes.
4. Base map information shown on this drawing shall be considered approximate.

## 2024 HYDROGRAPHIC SURVEY

SCALE: 1" = 5'-4"

0 2'-8" 5'-4"

N

1

## LEGEND:

- Major Contour
- Minor Contour

## STRUCTURE NOTES:

1. The measured waterline elevation was +508.59 ft on the survey date of 06-06-2024.
2. The waterline was measured 24 feet below the bottom of pier cap nose at the downstream nose of Pier 3. Per plans dated 04-04-1969, the bottom of cap nose was located at +532.59 ft.
3. Access to the site was the northwest embankment at the structure. GPS Coordinates: N38.88126°, W83.01823°
4. According to plans dated 04-04-1969, Piers 1 through 3 are founded on 12BP53 steel H-piles.

COLLINS ENGINEERS
124 Venture Court, Ste 10
Lexington, KY 40511
Phone: 859-367-0097
Fax: 859-367-0140

Ohio Department of Transportation, District 9
650 Eastern Avenue
Chillicothe, OH 45601
Phone: 740-773-2691

SR-348 OVER SCIOTO RIVER
STRUCTURE NO. 7305796
HYDROGRAPHIC SURVEY
SCIOTO COUNTY, OHIO

| | |
|---|---|
| CEI PROJECT | 55–15629.00 |
| INSPECTED BY: | JDS |
| DRAWN BY: | OPF |
| CHECKED BY: | MOR |
| DATE: | JUN 2024 |
| SHEET NO: | 3 |

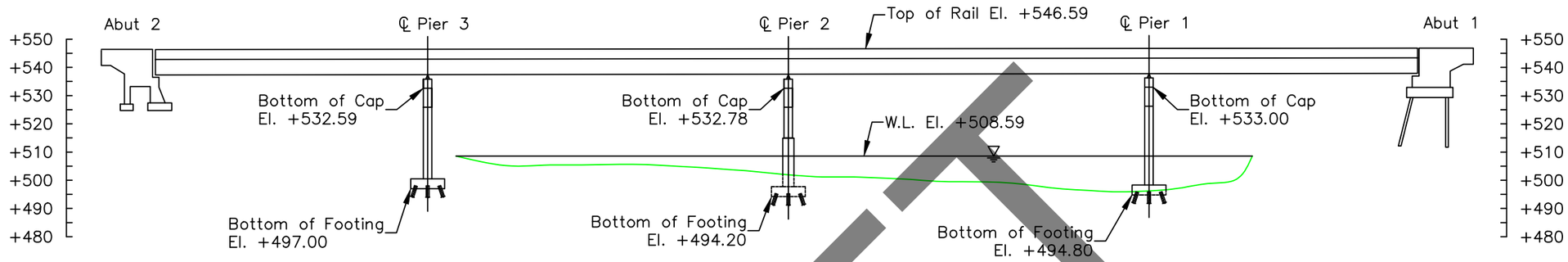


50 FT UPSTREAM
CHANNEL CROSS SECTION
(LOOKING DOWNSTREAM)

| Upstream Elevations (Looking Downstream) | |
|---|---|
| Location | Height (ft) |
| A2 | 12.5 |
| 1/4 | 25.8 |
| 1/2 | 31.5 |
| 3/4 | 34.5 |
| P3 | 41.2 |
| 1/4 | 42.6 |
| 1/2 | 42.3 |
| 3/4 | 42.6 |
| P2 | 45.0 |
| 1/4 | 48.8 |
| 1/2 | 49.9 |
| 3/4 | 52.1 |
| P1 | 48.5 |
| 1/4 | 48.1 |
| 1/2 | 41.0 |
| 3/4 | 26.5 |
| A1 | 11.8 |

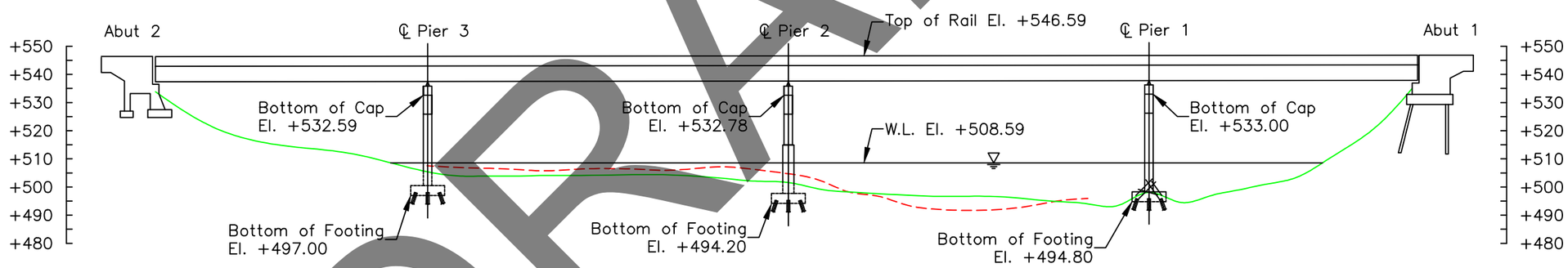


UPSTREAM FASCIA
CHANNEL CROSS SECTION
(LOOKING DOWNSTREAM)

LEGEND

- Approximate Channel Bottom – June 2024
- Approximate Channel Bottom – July 2019
- Approximate Channel Bottom – June 2014
- Timber Debris
- Water Surface
- +450 Elevation (ft)

DRAFT

COLLINS ENGINEERS
124 Venture Court, Ste 10
Lexington, KY 40511
Phone: 859-367-0097
Fax: 859-367-0140

Ohio Department of Transportation, District 9
650 Eastern Avenue
Chillicothe, OH 45601
Phone: 740-773-2691

SR-348 OVER SCIOTO RIVER
STRUCTURE NO. 7305796
CROSS SECTIONS
SCIOTO COUNTY, OHIO

CEI PROJECT 55–15629.00
INSPECTED BY: JDS
DRAWN BY: OPF
CHECKED BY: MOR
DATE: JUN 2024
SHEET NO: 4

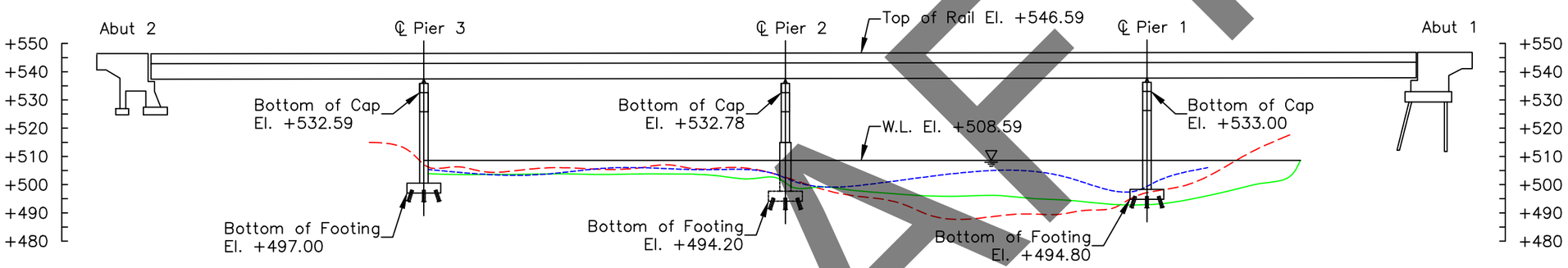


STRUCTURE CENTERLINE
CHANNEL CROSS SECTION
(LOOKING DOWNSTREAM)

DRAFT

LEGEND

| | |
|---|---|
| ——— | Approximate Channel Bottom – June 2024 |
| - - - - - | Approximate Channel Bottom – July 2019 |
| – – – – – | Approximate Channel Bottom – June 2014 |
| | Timber Debris |
| | Water Surface |
| +450 | Elevation (ft) |

COLLINS ENGINEERS
124 Venture Court, Ste 10
Lexington, KY 40511
Phone: 859-367-0097
Fax: 859-367-0140

Ohio Department of Transportation, District 9
650 Eastern Avenue
Chillicothe, OH 45601
Phone: 740-773-2691

SR-348 OVER SCIOTO RIVER
STRUCTURE NO. 7305796
CROSS SECTIONS
SCIOTO COUNTY, OHIO

CEI PROJECT
55–15629.00
INSPECTED BY:
JDS
DRAWN BY:
OPF
CHECKED BY:
MOR
DATE:
JUN 2024
SHEET NO:
5

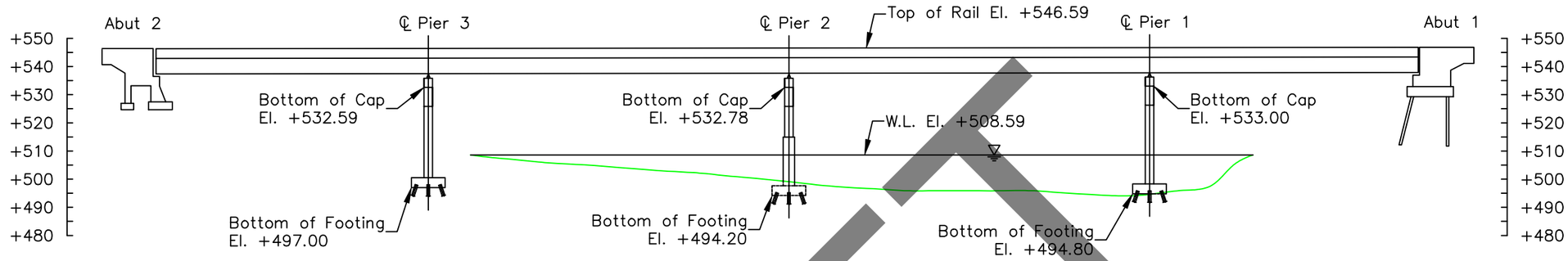


50 FT DOWNSTREAM
CHANNEL CROSS SECTION
(LOOKING DOWNSTREAM)

Downstream Elevations
(Looking Downstream)

| Location | Height (ft) |
|---|---|
| A2 | 12.4 |
| 1/4 | 21.0 |
| 1/2 | 29.4 |
| 3/4 | 32.8 |
| P3 | 42.5 |
| 1/4 | 42.9 |
| 1/2 | 43.0 |
| 3/4 | 43.4 |
| P2 | 46.0 |
| 1/4 | 49.2 |
| 1/2 | 50.7 |
| 3/4 | 52.3 |
| P1 | 49.3 |
| 1/4 | 49.1 |
| 1/2 | 37.0 |
| 3/4 | 22.7 |
| A1 | 11.4 |

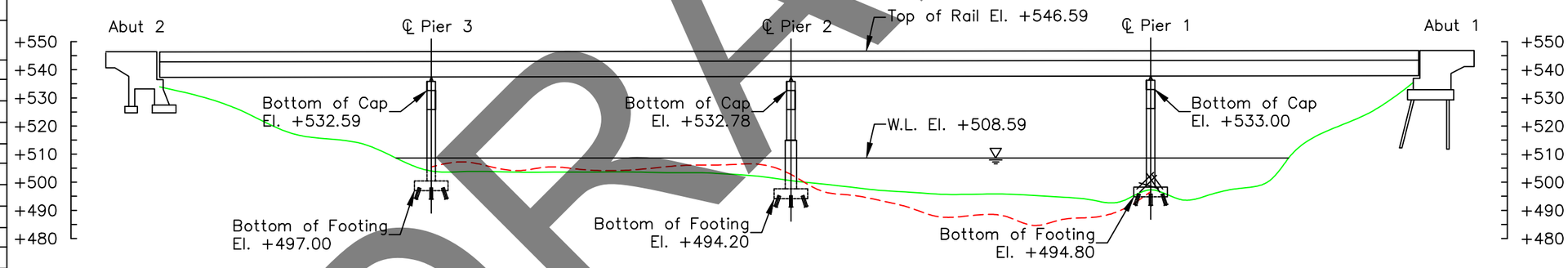


DOWNSTREAM FASCIA
CHANNEL CROSS SECTION
(LOOKING DOWNSTREAM)

LEGEND

| | |
|---|---|
| ——— | Approximate Channel Bottom – June 2024 |
| - - - - | Approximate Channel Bottom – July 2019 |
| - - - - | Approximate Channel Bottom – June 2014 |
| | Timber Debris |
| | Water Surface |
| +450 | Elevation (ft) |

DRAFT

COLLINS ENGINEERS
124 Venture Court, Ste 10
Lexington, KY 40511
Phone: 859-367-0097
Fax: 859-367-0140

Ohio Department of Transportation, District 9
650 Eastern Avenue
Chillicothe, OH 45601
Phone: 740-773-2691

SR-348 OVER SCIOTO RIVER
STRUCTURE NO. 7305796
CROSS SECTIONS
SCIOTO COUNTY, OHIO

CEI PROJECT
55–15629.00
INSPECTED BY:
JDS
DRAWN BY:
OPF
CHECKED BY:
MOR
DATE:
JUN 2024
SHEET NO:
6

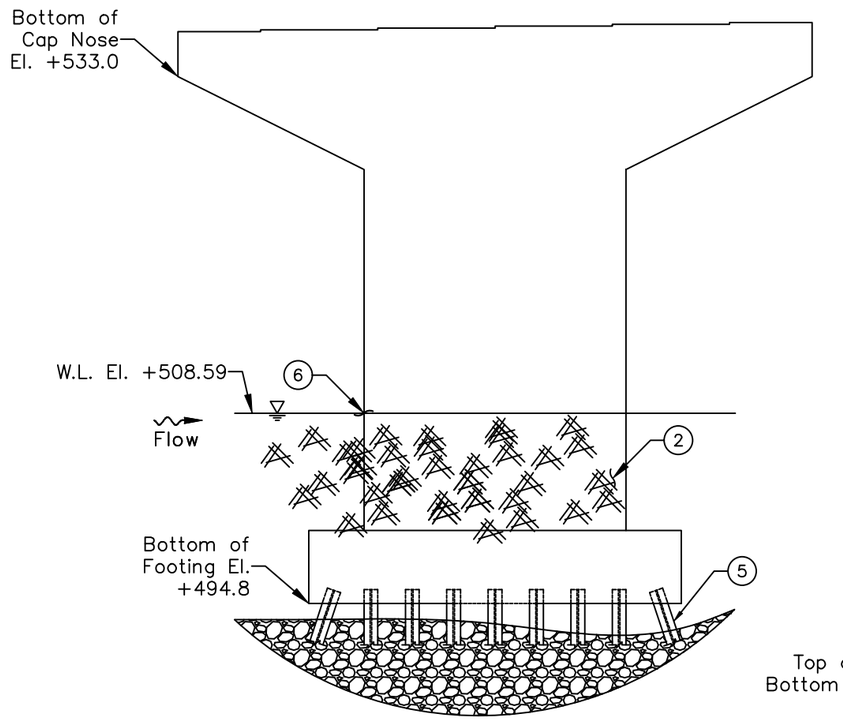


WEST ELEVATION
(LOOKING EAST)

| Undermining Measurements | |
|---|---|
| Location | Vertical Exposure (ft) |
| Northeast Corner | 1.5 |
| East Face | 3.5 |
| Southeast Corner | 4.8 |
| North Face | 1.0 |
| South Face | 4.7 |
| West Face | 1.6 |

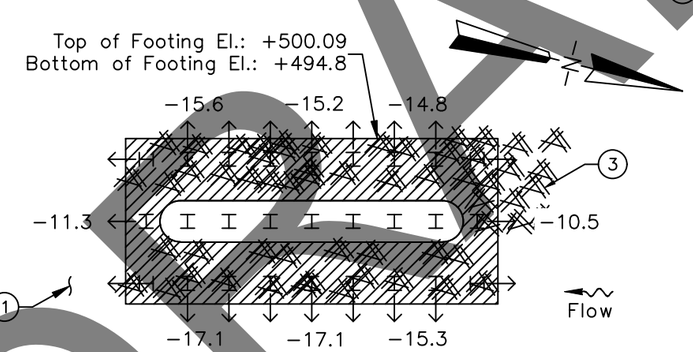


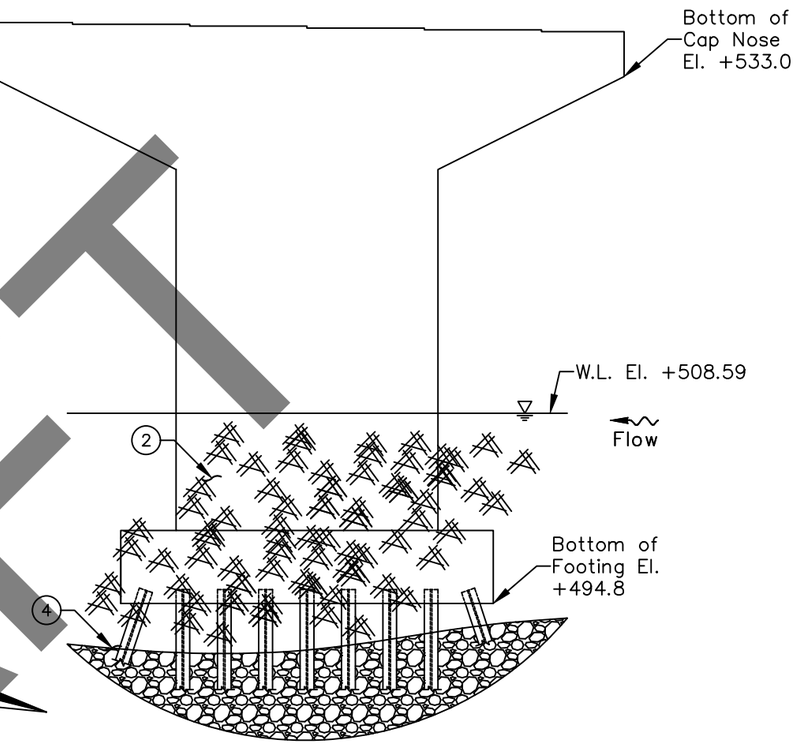


EAST ELEVATION
(LOOKING WEST)

INSPECTION NOTES:

1. The channel bottom material around Pier 1 consisted of boulders up to 6 in. diameter with sand in–fill and no probe rod penetration.
2. The submerged portions of the pier exhibited light scaling up to 1/16 in. deep extending from the channel bottom to the waterline.
3. Heavy timber debris accumulation consisting of branches up to 3 in. diameter was observed along the entire west and east face of the pier. A timber log up to 2 ft diameter was observed wrapped around the upstream nose of the pier located approximately 3 ft below the waterline.
4. A scour depression with undermining up to 4.8 ft vertical was observed around the entire pier at Pier 1. The pier is pile supported, and the piles were adequately embedded in the channel bottom at the time of inspection.
5. The exposed steel H–piles typically exhibited rust nodules up to 1/2 in. diameter with up to 1/8 in. section loss.
6. The flow angle of attack was observed to be striking the northeast corner approximately 10 degrees off the upstream nose of Pier 1.

LEGEND

| | |
|---|---|
| −2.7 | Sounding Depth from Waterline (ft) |
| ——— | Approximate Channel Bottom – June 2024 |
| | Timber Debris |
| | Water Surface |
| | Undermining |
| ↦ | Exposed Battered H–Pile With Direction |

DRAFT

COLLINS ENGINEERS
124 Venture Court, Ste 10
Lexington, KY 40511
Phone: 859-367-0097
Fax: 859-367-0140

Ohio Department of Transportation, District 9
650 Eastern Avenue
Chillicothe, OH 45601
Phone: 740-773-2691

SR-348 OVER SCIOTO RIVER
STRUCTURE NO. 7305796
PIER 1
SCIOTO COUNTY, OHIO

CEI PROJECT: 55–15629.00
INSPECTED BY: JDS
DRAWN BY: OPF
CHECKED BY: MOR
DATE: JUN 2024
SHEET NO: 7

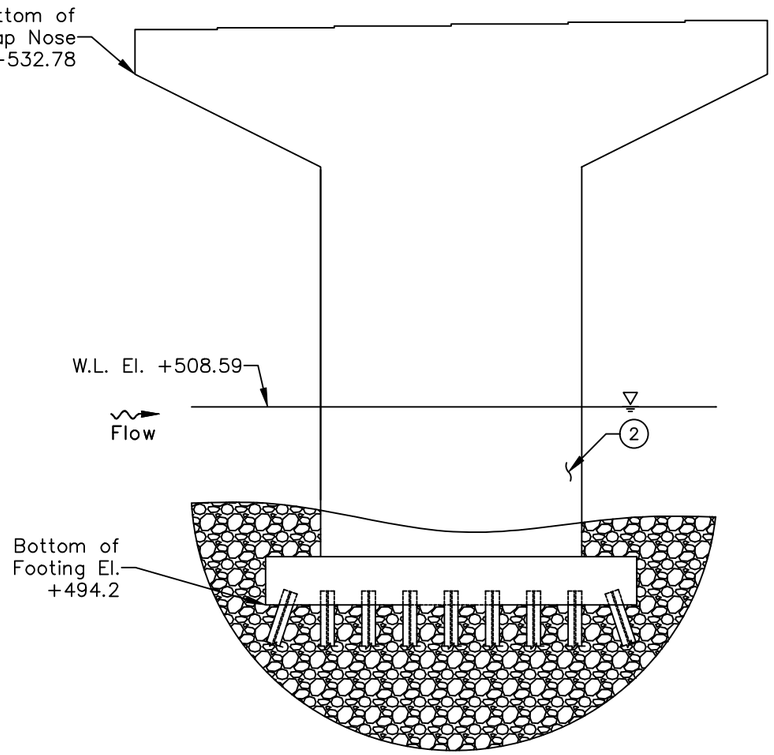


WEST ELEVATION
(LOOKING EAST)

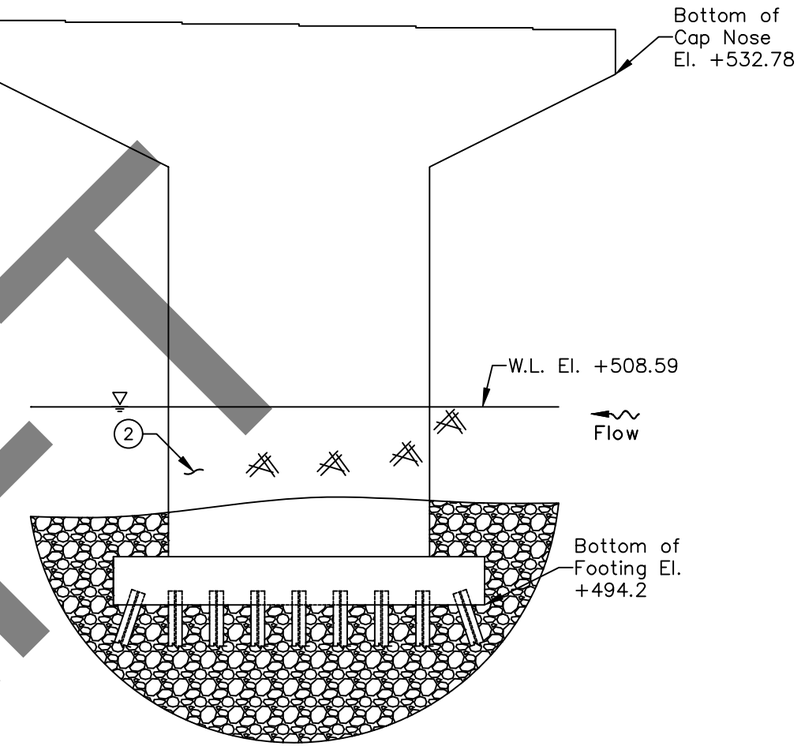


EAST ELEVATION
(LOOKING WEST)

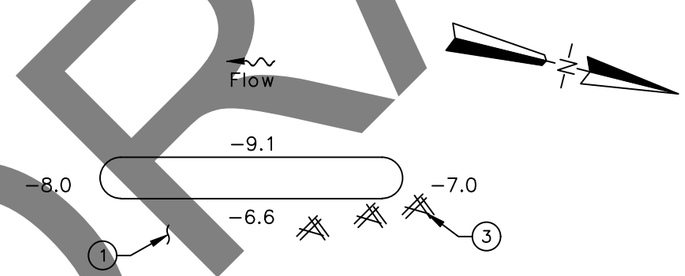


INSPECTION NOTES:

1. The channel bottom material around Pier 2 consisted of boulders up to 6 in. diameter with sand in−fill and no probe rod penetration.
2. The submerged portions of the pier exhibited light scaling up to 1/16 in. deep extending from the channel bottom to the waterline.
3. A timber log up to 3 ft diameter was observed from the upstream nose along the east face of the pier.

LEGEND

| | |
|---|---|
| −2.7 | Sounding Depth from Waterline (ft) |
| ——— | Approximate Channel Bottom − June 2024 |
| | Timber Debris |
| | Water Surface |

DRAFT

COLLINS ENGINEERS
124 Venture Court, Ste 10
Lexington, KY 40511
Phone: 859-367-0097
Fax: 859-367-0140

Ohio Department of Transportation, District 9
650 Eastern Avenue
Chillicothe, OH 45601
Phone: 740-773-2691

SR-348 OVER SCIOTO RIVER
STRUCTURE NO. 7305796
PIER 2
SCIOTO COUNTY, OHIO

CEI PROJECT
55−15629.00

INSPECTED BY:
JDS

DRAWN BY:
OPF

CHECKED BY:
MOR

DATE:
JUN 2024

SHEET NO:
8

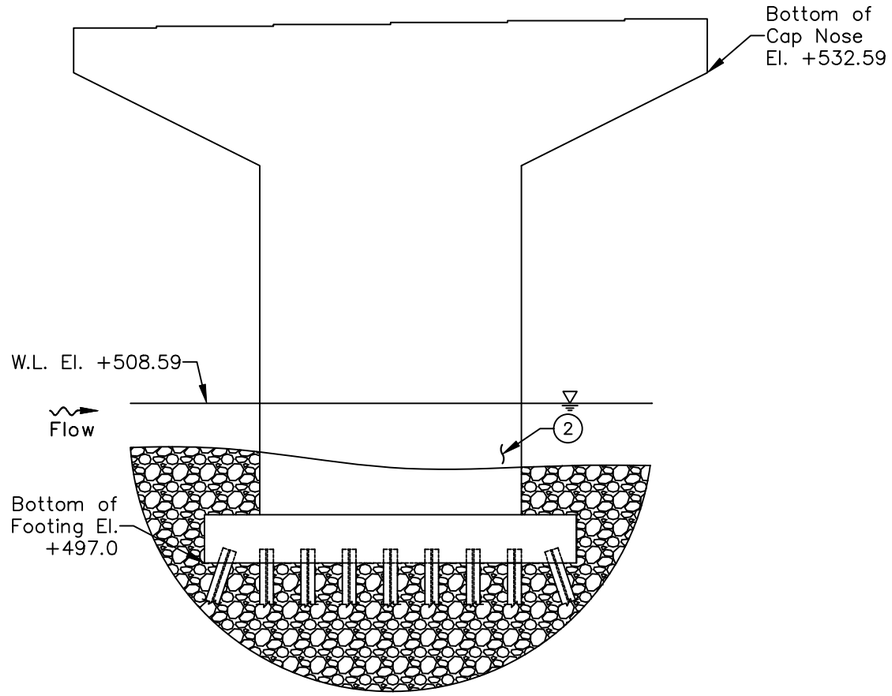


WEST ELEVATION
(LOOKING EAST)

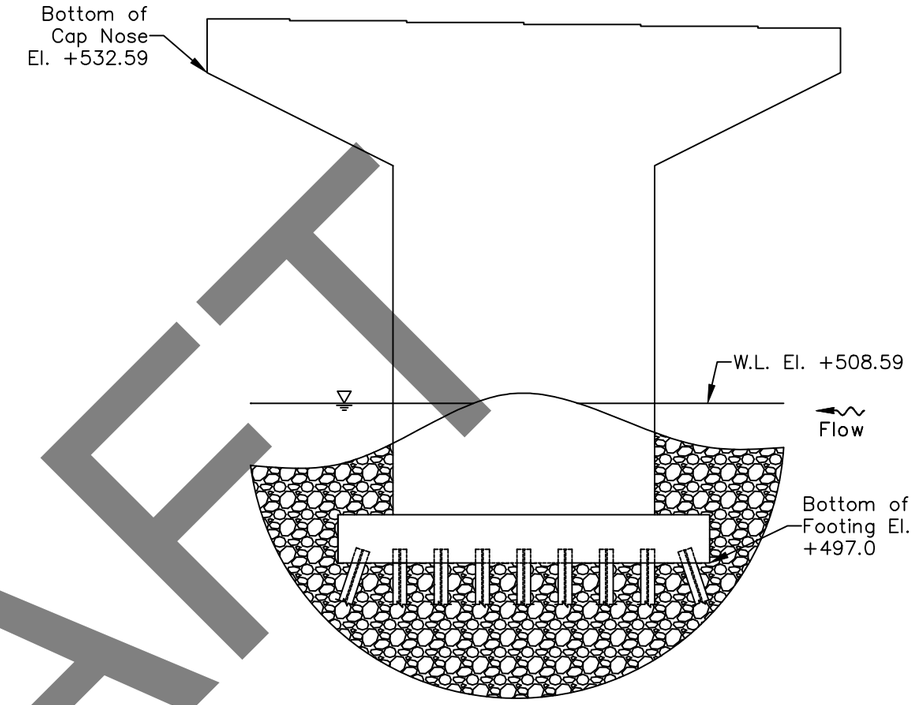


EAST ELEVATION
(LOOKING WEST)

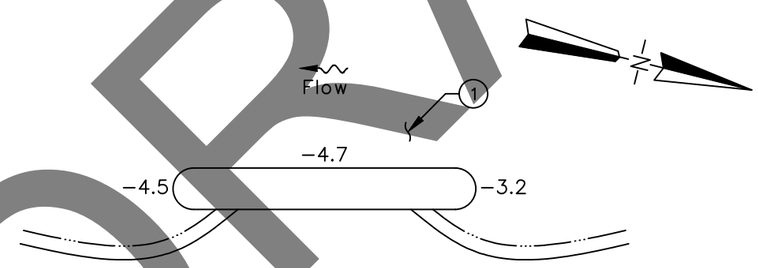


DRAFT

INSPECTION NOTES:

1. The channel bottom material around Pier 3 consisted of boulders up to 6 in. diameter with sand in−fill and no probe rod penetration.

2. The submerged portions of the pier exhibited light scaling up to 1/16 in. deep extending from the channel bottom to the waterline.

LEGEND

| | |
|---|---|
| −2.7 | Sounding Depth from Waterline (ft) |
| ——— | Approximate Channel Bottom − June 2024 |
| | Timber Debris |
| | Water Surface |

COLLINS ENGINEERS
124 Venture Court, Ste 10
Lexington, KY 40511
Phone: 859-367-0097
Fax: 859-367-0140

Ohio Department of Transportation, District 9
650 Eastern Avenue
Chillicothe, OH 45601
Phone: 740-773-2691

SR-348 OVER SCIOTO RIVER
STRUCTURE NO. 7305796
PIER 3
SCIOTO COUNTY, OHIO

| | |
|---|---|
| CEI PROJECT | 55−15629.00 |
| INSPECTED BY: | JDS |
| DRAWN BY: | OPF |
| CHECKED BY: | MOR |
| DATE: | JUN 2024 |
| SHEET NO: | 9 |

# EXHIBIT 2 – INSPECTION PHOTOGRAPHS

DRAFT

Photograph No. 1: Overall View of Structure No. 7305796 (SCI-348R-17510), Looking South.

Photograph No. 2: Overall View of Structure No. 7305796 (SCI-348R-17510), Looking North.

DRAFT

Photograph No. 3: Overall View of the East Approach, Looking West.

Photograph No. 4: Overall View of the West Approach, Looking East.

DRAFT

Photograph No. 5: View of the East Embankment Upstream of the Structure, Looking East.

Photograph No. 6: View of the East Embankment at the Structure, Looking Southeast

DRAFT

Photograph No. 7: View of the East Embankment Downstream of the Structure, Looking Southeast.

Photograph No. 8: View of the West Embankment Upstream of the Structure, Looking Northwest.

DRAFT

Photograph No. 9: View of the West Embankment at the Structure, Looking West.

Photograph No. 10: View of the West Embankment Downstream of the Structure, Looking Southwest.

DRAFT

Photograph No. 11: View of the Upstream Channel, Looking North.

Photograph No. 12: View of the Downstream Channel, Looking South.

DRAFT

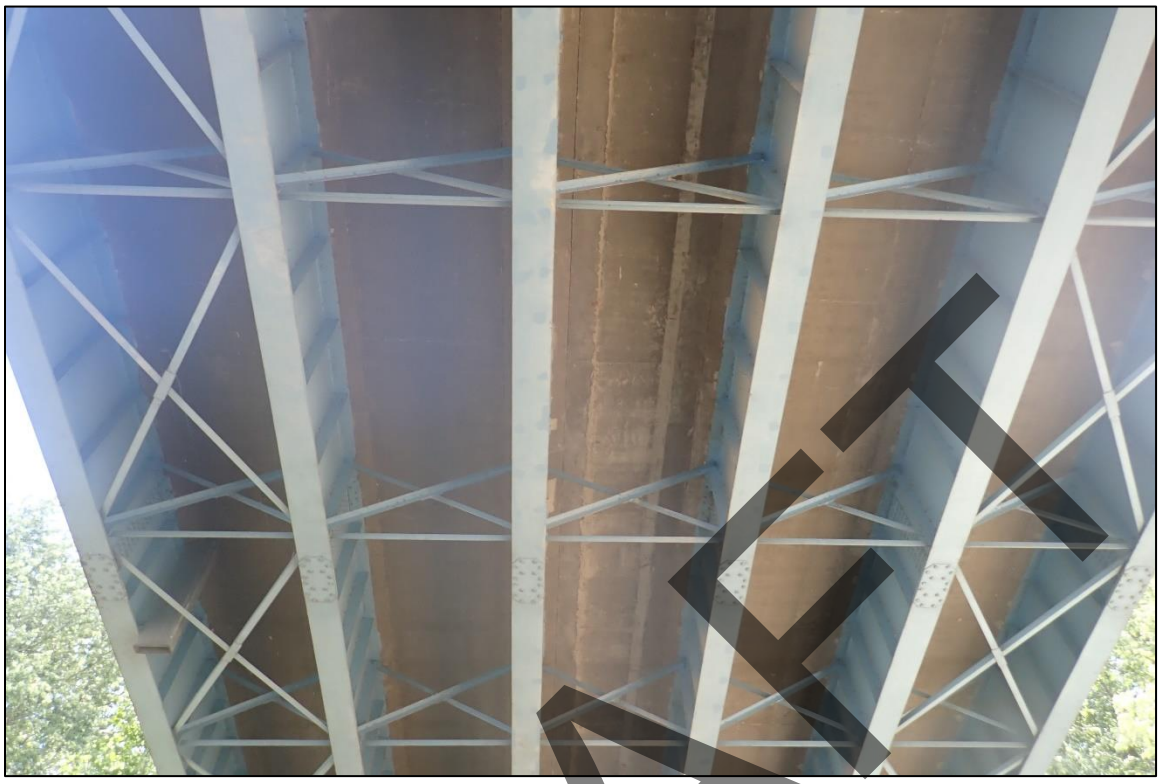

Photograph No. 13: View of the Typical Underdeck Condition, Looking South.

Photograph No. 14: View of the East Face of Pier 1, Looking West.

DRAFT

Photograph No. 15: View of the West Face of Pier 1, Looking Northeast.

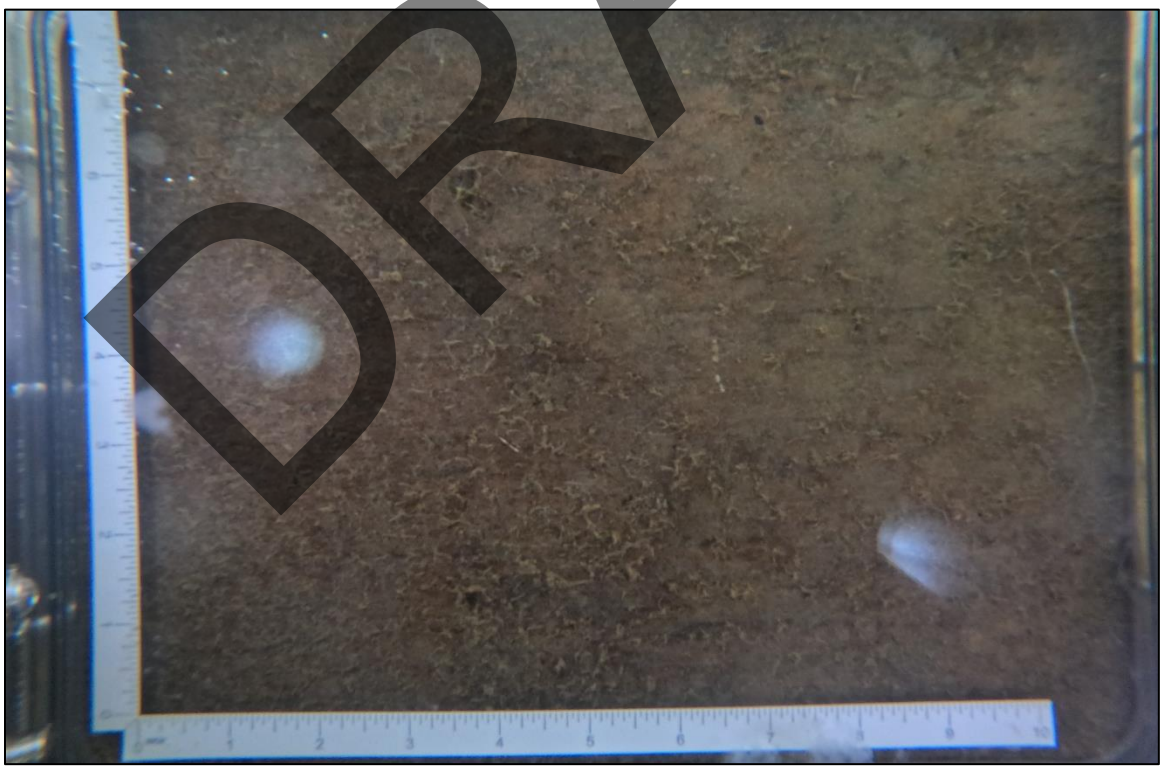

Photograph No. 16: View of the Typical Concrete Condition Below the Waterline, Looking East.

DRAFT

Photograph No. 17: View of the East Face of Pier 2, Looking West.

Photograph No. 18: View of the West Face of Pier 2, Looking Southeast.

DRAFT

Photograph No. 19: View of the East Face of Pier 3, Looking West.

Photograph No. 20: View of the West Face of Pier 3, Looking East.

DRAFT

# EXHIBIT 3 – UNDERWATER DIVE INSPECTION PROCEDURE CHECKLIST

DRAFT

**Underwater Dive Inspection Procedure Checklist**

Acceptable written procedures communicate to the next dive team what is necessary to ensure a safe and successful inspection. Each bridge requiring underwater dive techniques must have a unique written inspection procedure. The prior inspection report does not suffice for the required procedures. It is valuable to review the last inspection notes, but they do not serve the same purpose as a stand-alone inspection procedure.

This document shall be completed for all underwater dive inspections. This document shall be reviewed prior to performing the field work and it shall be updated when necessary.

## I. Bridge Identification

a. Agency with Inspection Responsibility: _ODOT DISTRICT 9_____

Dive Frequency: _____12_____ months

SFN: 7305796_____ Bridge Number (County-Route-SLM-SD): SCI-348-1751

Superstructure Type Main Span Type: Continuous Steel Girder

Approach Span: N/A

Substructure Type Abutment Type: Concrete

Pier Type: Concrete

Total Pier Count: 3

Total Pier Count in water: 3

Foundations: Steel H-Piles

Feature Intersected Scioto River

DRAFT

**b. Photographs**

Elevation

Underside

Endview

DRAFT

## II. Office and Field Assessment

Prior to the inspection, obtain and review copies of the previous underwater inspection reports, routine inspection reports, scour and hydraulic information, and design plans in preparation of the inspection. Divers should pay particular attention given to any observed areas of deterioration, the channel conditions and factors that may accelerate material deterioration. Changes shall be noted in the inspection procedure. Site conditions should be reviewed prior to diving.

a. Channel Conditions

____Waterway features

__X__Rapid stream flows,

__X__Significant debris accumulation

____Constricted waterway openings

__X Soft or unstable streambeds

____Meandering channels

____Other which may promote scour and undermining of substructure elements

____Navigable Waterway

____Flow Controls

b. Anticipated Water conditions which may affect the inspection

___Cold Water (Apprx. Temp __°F)

__X__Black water

__X__Rapid stream flows

____Near military facility

____Tribal fishing

__X__Water quality

____History of Log jams

c. Identify factors that may accelerate the deterioration of the bridge elements:

____Highly corrosive water

____Unprotected steel members

____Other

Risk Factor Narrative:

| |
|---|
| |

DRAFT

III. **Contacts Prior to Work**

(TO BE COMPLETED BY THE BRIDGE OWNER)

Point of contact for immediate action such as closing the bridge due to findings)

Contact Bridge Owner _____14_____ (number) days before the proposed underwater inspection.

Special contracting and scheduling procedures prior to inspection, include recommended lead time

| Entity | Contact Name and Title | Contact Phone | Lead Time |
|---|---|---|---|
| Coast Guard | N/A | N/A | N/A |
| Property Owner | N/A | N/A | N/A |
| Access Equipment | N/A | N/A | N/A |
| Lake or River draw-down | N/A | N/A | N/A |
| Canal dry time | N/A | N/A | N/A |
| Tree removal | N/A | N/A | N/A |
| Other: | N/A | N/A | N/A |
| Other: | N/A | N/A | N/A |

DRAFT

## IV. **Dive Team Shall Include the Following:**

Dive Team Narrative:

| |
|---|
| The structure shall be investigated using a three-member dive team: one dive supervisor to monitor communications and air supply while taking notes, one diver, and one tender/standby diver. There shall be one NBIS Team Leader onsite at all times. |

*Example: The Bridge shall be investigated using a three-member dive team: one supervisor to monitor rack box and take notes, one diver, and one tender/standby diver. There shall be one NBIS Team Leader onsite at all times.*

## V. **Site Information**

Navigable waterway: Y / **N**

Anticipated current ___2___ ft

If Yes, waterway river point _____

Scour Critical (item 113): ___3_____

Anticipated water visibility depth __1.0___ ft

POA in place: Y/**N**

Anticipated Dive depth __17.1___ ft

Scour Monitoring devices present: Y/**N**

Verify the Scope of Services when work is contracted for the procedure for underwater elements that are not in water during an inspection.

Site Information Narrative:

| |
|---|
| |

DRAFT

The underwater inspection consists of a visual and tactile examination of the accessible surfaces of the substructure items in water. Additional items should reference the scope of services in the contract. For reference the following items are in water:

| Item | Number of Units | Level of Inspection (1, 2 or 3) with Commentary |
|---|---|---|
| Piers and Number of Columns | 3 | 100% Level 1<br>10% Level 2 |
| Abutment | | |
| Culvert | | |
| Scour Countermeasures | | |
| Fenders or Dolphins | | |

Photographs should be taken, if water clarity permits, for typical conditions, conditions that have changed since last inspection and significant or noteworthy deficiencies. The type of channel bottom material, the presence or extent of scour, the presence or extent of riprap, the presence or extent of drift and debris, and the location of any foundation exposure or undermining shall be quantified. Include depth, length, height and location of deficiencies.

DRAFT

VI. **Equipment and Field Logistics**

a. The inspection should be conducted using:

____Chest waders

____Hip waders

__X__Diving equipment

____SCUBA (Note that ADCI Consensus Standards require communication systems be employed for both SCUBA and Surface-Supplied (whether air or mixed-gas) dive modes)

__X__SCUBA with communication

____Surface Supplied with communication

b. The channel bottom should be sounded utilizing

__X__Digital fathometer

__X__Telescoping survey rod

____ acoustic imaging

c. During the inspection, the divers should work from

__X__Shore

____Boat

____Either

The note taker should work alongside the dive team.

d. Access to the waterway should be obtained from the shore (north bank, southwest quadrant, driveway 30 yards north etc.)

Southwest Embankment

e. The maximum depth of the channel is typically 17.1 feet at the east face of Pier 1.

Reference Datum Bottom of cap at Pier 3

Soundings should be dictated by the scope of work. When not detailed in the scope they should be repeated from the previous soundings. If neither exist then they need to be taken in a grid pattern between substructure units 100' upstream and 100' downstream.

DRAFT

## VII. Inspection Procedure History

Created: COLLINS ENGINEERS, INC. Date: 06/06/2024

Updated By:_____ Date: _____

Updated By:_____ Date: _____

Updated By:_____ Date: _____

Updated By:_____ Date: _____

Updated By:_____ Date: _____

## VIII. Other Narrative Not Included In Previous Sections

DRAFT